DRAWING NO: 1-03-000-00005

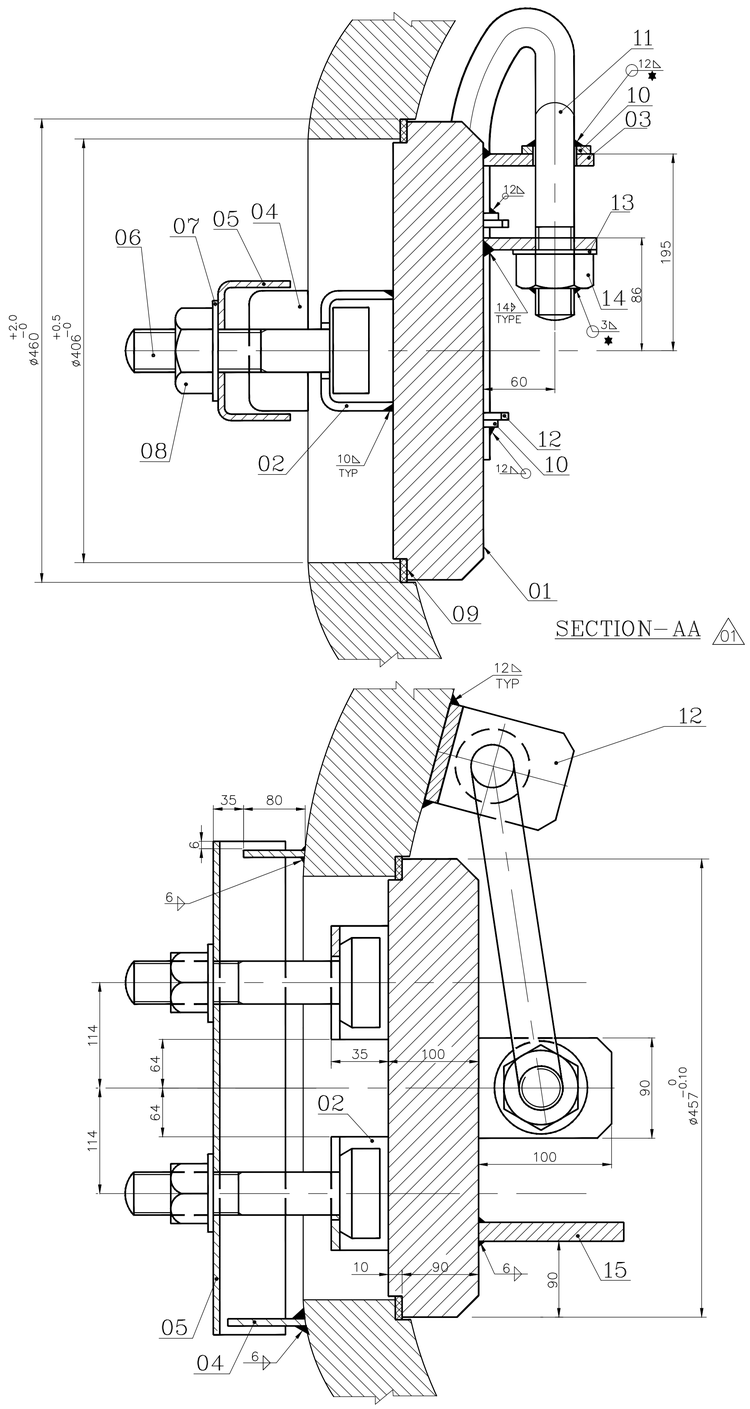

SECTION–AA 01

SECTION –BB 01

(TURN TO 90°)

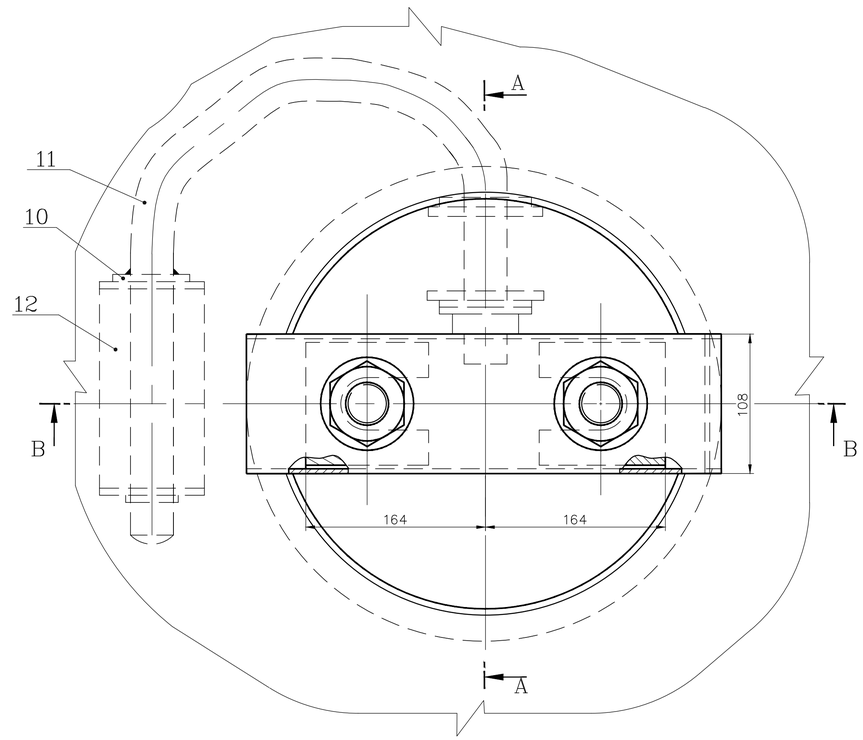

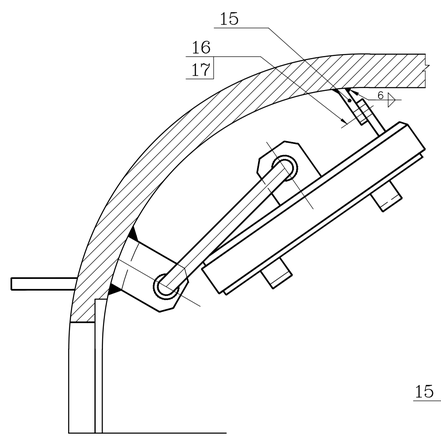

DETAIL C

(SEE NOTE–3)

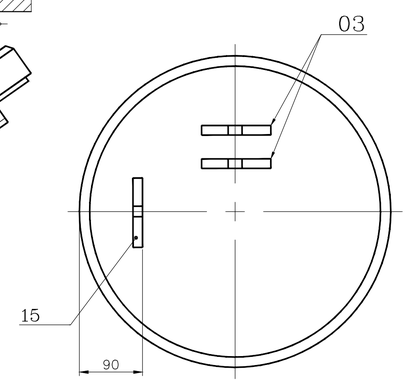

DETAIL–D

(SEE NOTE–5)

FOR TOLERANCES OF UNTOLERANCED DIMENSIONS DURING MANUFACTURE REFER PLANT STD. NO TP 023 0299

SIZE OF WELD	WELD SPEC ELECTRODE	WELD LENGTH
3 ◺	E 7018	0.59M
6 ◺	E 7018	0.46M
10 ◺	E 7018	0.40M
12 ◺	E 7018	0.94M
14 ◺ ◺	E 7018	0.20M

NOTES:-

1. ARRANGEMENT AS SHOWN HERE IS LEFT HANDED. IT MAY BE RIGHT HANDED ALSO TO SUIT THE CONVENIENCE. (THAT IS PART No.12 MAY BE WELDED TO THE DISHED END ON THE RIGHT SIDE ALSO)
2. '✱' THESE WELDING SHOULD BE PERFORMED WHILE ASSEMBLING THE DOOR INSIDE THE DRUM
3. DETAIL–C SHOWING THE PROVISION FOR HOLDING THE DOOR PLATE DURING MAINTENANCE.
4. ITEM No. 04 SHOULD BE CUT AND GROUND TO SUIT THE OUTER SURFACE OF DISHED END.
5. DETAIL–D SHOWS THE LOCATION OF ONE OF ITEM–15 IN THE DOOR PLATE. THE ANOTHER ITEM–15 TO BE LOCATED SUITABLY AT SHOP (INSIDE THE DRUM) & WELDED.
6. DESIGN PARAMETERS: 02
   1) DESIGN PRESSURE : 220 KG/CM^2 (G)
   2) DESIGN TEMPERATURE : 372.5°C

VARIANT NUMBER	ITEM NUMBER	DESCRIPTION	STD	DRAWING NUMBER	ITEM NO / VAR NO	MATERIAL CODE / MATERIAL SPECN	A/C/P	UNIT / DI	UNIT WEIGHT / QUANTITY	GS	ZONE
	17	SCRU. HEX.Gr.C 4.6 M12X40		41222–12040		41222–12040			0.050 / 1		
	16	NUT HEX Gr.C M12		41304–12000		41304–00012			0.020 / 1		
	15	MH DOOR PL 10X60X100 TY–D		6101–0010–30	10	94–304–008	C		0.500 / 2		
	14	NUT HEX Gr.C M 48X3		41304–48000		41304–30048			0.930 / 1		
	13	WASHER PNCHD A48		41408–48000		41408–00048			0.280 / 1		
	12	MH DOOR BRACKET PL.16X80X291.5		6101–0010–26	06	94–304–006	C		3.000 / 1		
	11	MH DOOR SLING ROD D50; L=866		6101–0010–27	07	94–304–009	C		14.500 / 1		
	10	MH DOOR COLLAR PL.12		6101–0010–28	08	94–304–007	C		0.400 / 3		
	09	SPIRAL WOUND GASKET		3–04–126–02368		96–187–066			1.000 / 2		
	08	NUT HEX.Gr.C M30		41304–30000		41304–00030			0.230 / 2		
	07	WASHER PNCHD A30		41408–30000		41408–00030			0.050 / 2		
	06	MH DOOR PIN D 63;L=300		6101–0010–32	09	94–304–017	C		2.000 / 2		
	05	MH DOOR YOKE PL,12X460X236		6101–0010–25	05	94–304–005	C		10.500 / 1		
	04	MH DOOR PL.12X76X80, TY–E		6101–0010–31	11	94–304–014	C		0.600 / 2		
	03	MH DOOR PL.16X110X90,TY–C		6101–0010–24	04	94–304–004	C		1.200 / 2		
	02	MH DOOR CLAMP PL.10X100X122		6101–0010–23	03	94–304–003	C		1.000 / 2		
	01	MH DOOR PLATE D457;T 100 TYPE–A		6101–0010–21	01	94–304–012 / SA 299 Gr.A	A		135.000 / 1		

REV	DATE	ALTERED :	ZONE	
06	10.05.14	RM / CHD & APPD : R.T		FOR ITEM No.01, MATERIAL SPEC CHANGED FROM SA299 TO SA299Gr.A
05	25.02.09	D.LATHA / CHD & APPD : R.T		DRG. REDRAWN IN AUTOCAD & DEPOSITED AS SOFT COPY.
04	04.03.05	–sd– / CHD & APPD : –sd–		DRG.No. MATERIAL CODE & WEIGHT REVISED FOR ITEM No.09. TOTAL WT.REVISED.
03	01.07.03	–sd– / CHD & APPD : –sd–		REVISION No. UPDATED IN BOM SCREW,NUT & WASHER Wt. ALTED.
02	11–10–01	–sd– / CHD & APPD : –sd–		DESIGN PARAMETERS ADDED(NOTE–6)
01	31–10–95	–sd– / CHD & APPD : –sd–		THICKNESS INDICATED IN SECTION–AA&BB

CAUTION: The information on this document is the property of BHARAT HEAVY ELECTRICALS LTD. It must not be used directly or indirectly in any way detrimental to the interest of the company.

TYPE OF PRODUCT OR NAME OF CUSTOMER/PROJECT: STANDARD

Bharat Heavy Electricals Ltd
UNIT: HIGH PRESSURE BOILER PLANT
TIRUCHIRAPALLI – 620014

	NAME	SIGNATURE	DATE
DRN	R.S.P		08.11.96
CHD	RAJA.K		09.11.96
APPD	P.S.G		09.11.96

355–053

DEPT: PP | CODE: 121 | ALL DIMENSIONS ARE IN MM | PROJECTION | SCALE: N.T.S | WEIGHT (Kg): 178.64 | REF TO ASSY / OLD DWG: 6101–0011

TITLE: ASSY. OF MAN HOLE DOOR ø406MM OPENING

DRAWING NO: 1–03–000–00005 | REV: 06